NOTE

ON AN

INEXPENSIVE TEMPORARY SMOKE HOUSE

BY

A. MOORE

During the last two years the Institute has been recommending to small-holders a very cheap, but effective, smoke-house. It is easily built of common materials, and no skilled labour is necessary. The cost of construction is about $4 if the owner does the work himself and can obtain bamboos etc. free, or about $8 if all labour and materials have to be paid for. This smoke-house was fully described by Eaton in this *Journal*, Volume 6, No. 1, August 1935. Models have been exhibited at many local Shows, and many number of such smoke-houses are now in use on small-holdings throughout Malaya.

The original size of smoke-house, suitable for most small-holdings, holds only about 60 sheets, equivalent to 80 or 100 lb. of rubber. This is too small for estate use. It has, however, been found that larger smoke-houses of ten or twenty times this capacity, built on the same lines, will work successfully. They cost thirty or forty dollars each, and last for a year or more.

On estates they have proved very useful as temporary smoke-houses pending the construction of a large permanent one. For example, on newly-opened estates where it is desired to defer the building of a permanent smoke-house until the daily crop has reached a certain figure, cheap temporary smoke-houses can be used. Also, where an estate smoke-house has been destroyed by fire sufficient of these temporary ones to deal with the crop can be built within a couple of days, and production is almost uninterrupted.

The construction of a temporary smoke-house to hold about 1,600 lb. of sheet (dry weight), is shown on the accompanying diagrams. The photographs show two of these which are in regular use on the Institute's Experiment Station at Sungei Buloh. Each one cost $35. The drying time for sheet under one-eighth of an inch thick is four to five days.

The smoke-house consists of one room. The framework is of rough timber, and the walls and roof are of split bamboos lined with strong paper. Other materials suitable for the walls and roof are sacking treated with tapioca starch, or split *nibong* lined with strong paper. Boards could of course be used, but would add considerably

to the expense. The smoke-house is heated by means of a fire inside the building. Half of an old oil drum makes a suitable firebox, over which is hung a sheet of corrugated iron to act as a baffle plate. The lower parts of any posts near to the fire should be protected by metal sheaths. The ventilators consist of holes about 12 ins. × 6 ins.; one at the base of each wall and two near the ridge of the roof. They should be provided with adjustable covers.

To protect it from the weather, the smoke-house is provided with an outer roof of attaps, raised about a foot above the top of the smoke-house proper. This outer roof can be carried on the corner posts of the smoke-house, or may be built with its own supporting posts in the form of a separate shed.

To sum up, a very inexpensive smoke-house, lasting a year or more and holding about 1,600 lb. of sheet, can be built for $35. The drying time is four to five days; so that five of these smoke-houses would deal with a crop of 1,600 lb. per day, which is the crop of an estate of a thousand acres. The chief disadvantage of these cheap, temporary smoke-houses is that operating labour costs are high compared with modern smoke-houses of, say, the "Subur" type. There is also a greater risk of fire, and the fuel consumption is heavier. They are, however, valuable as temporary smoke-houses on estates, and might even be used for long periods if desired.

Kuala Lumpur,

9th February, 1937

TEMPORARY SMOKE HOUSE

Cost about $35 — Capacity about 1,600 lb. of sheet — Drying Time 4-5 days

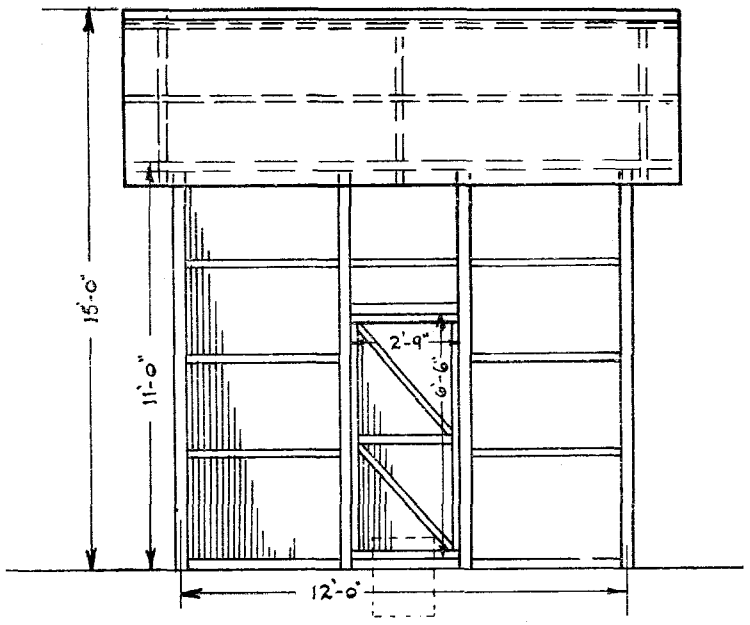

FRONT ELEVATION

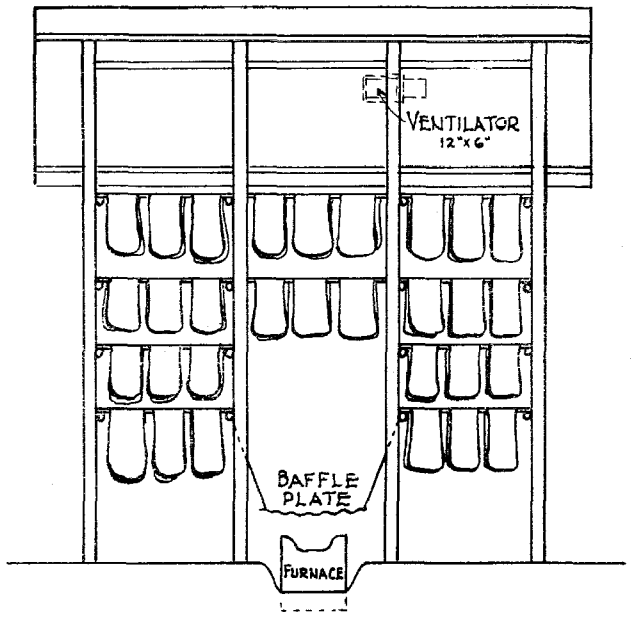

SECTION C. D.

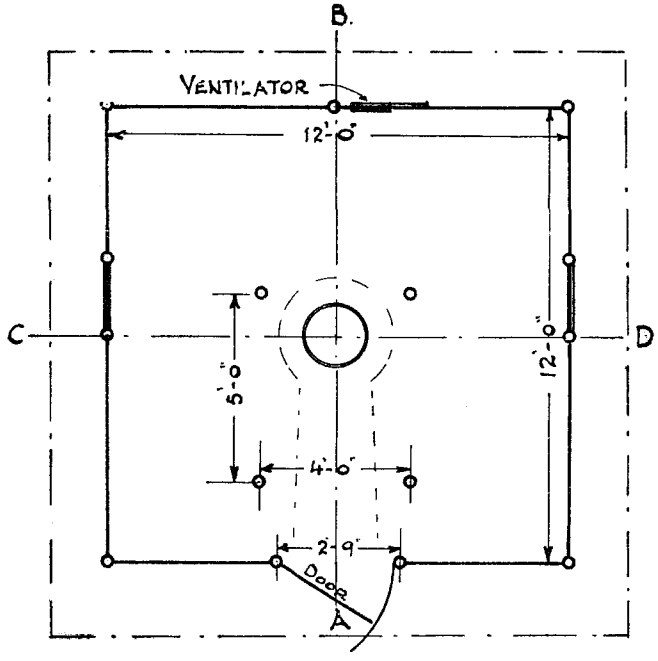

GROUND PLAN

Posts—Bamboo or Rough Timber
Beroties—Light Bamboo or Bertams

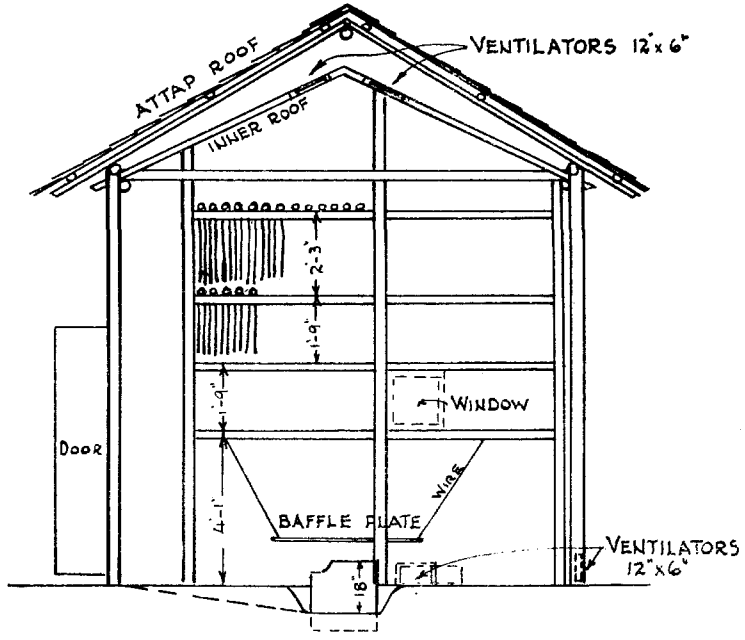

SECTION A. B.

Walls and Inner Roof—Split Bamboo lined with paper, or Sacking treated with Tapioca paste